TSCY Drum Pre-cleaning Sieve

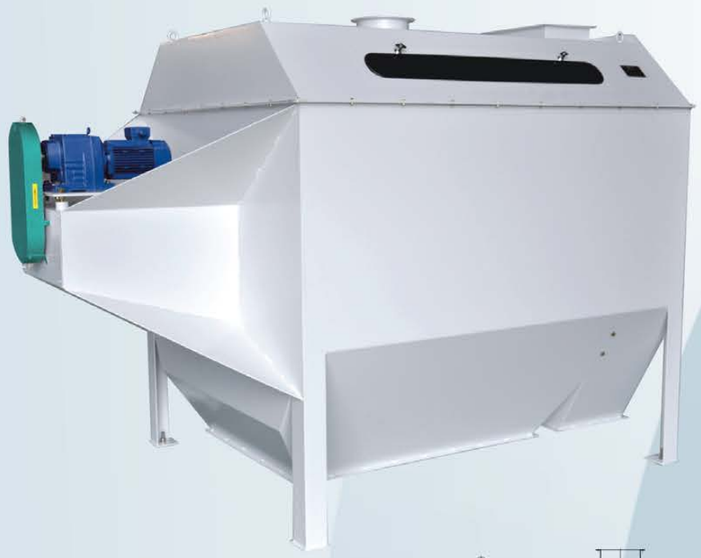

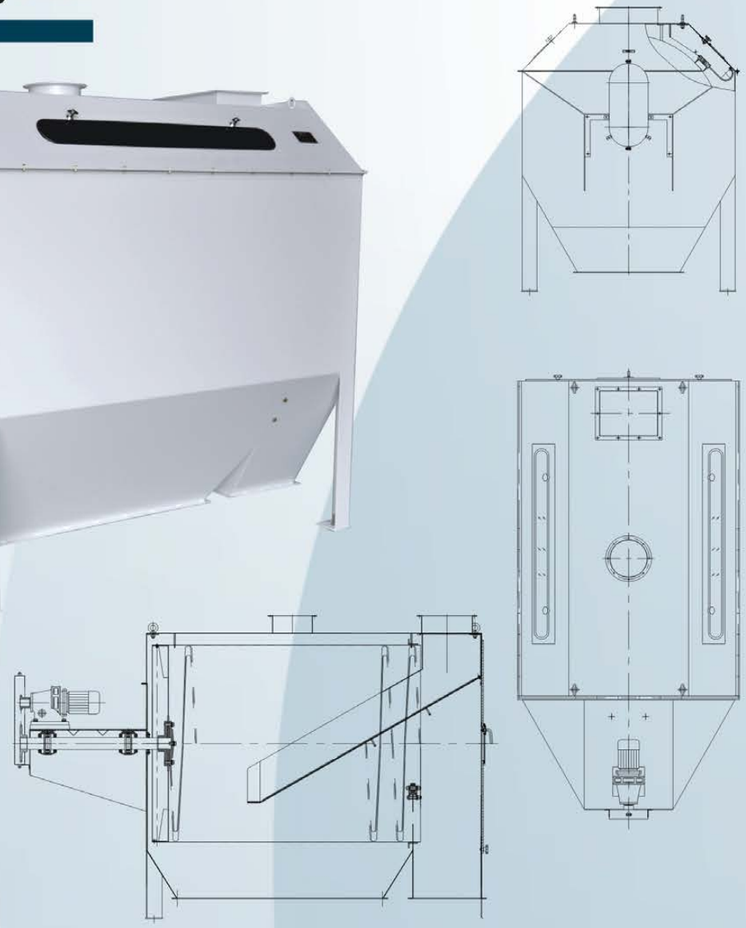

It is used to remove large impurities in rice, flour, feed and wine processing industries.

- Beautiful shape
- Modern modeling
- Good processing performance

Items / Model	TSCY42	TSCY63	TSCY80	TSCY100	TSCY120	TSCY125	TSCY150
Output（t/h）	5~10	10~20	20~40	30~60	40~80	50~100	60~120
Allocated air amount (m^3/min)	4	8	12	18	25	30	35
Power（kW）	0.37	0.55	0.75	1.1	1.5	1.5	1.5
Reducer type	BWD120-23-0.37	BWD120-23-0.55	BWD150-35-0.75	BWD150-35-1.1	BWD180-35-1.5	BWD180-35-1.5	BWD180-43-1.5
Weight(kg)	170	290	395	510	730	900	1150
Overall dimension (L×W×H)(mm)	1180×680×1100	1707×840×1240	2038×1020×1560	2120×1220×1680	2380×1430×1918	3031×1499×1920	3031×1749×2170

TQLZ Vibration Sieve

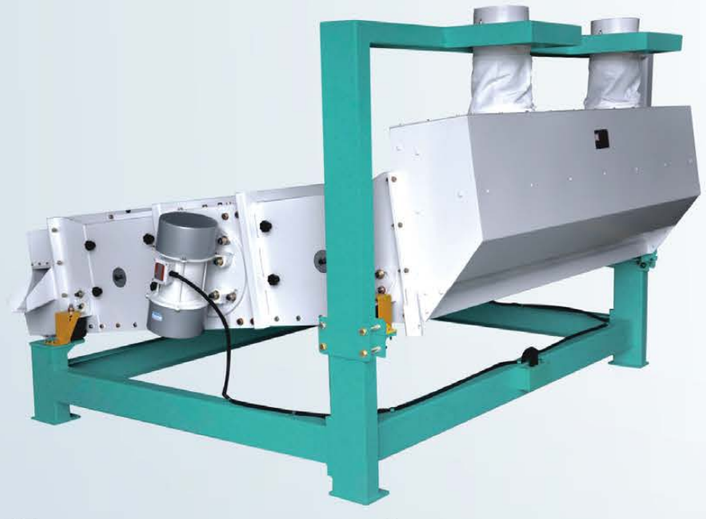

It is mainly used to clean and remove large, medium, small and light impurities.

- Low noise
- Large processing
- Low consumption of energy
- Good cleaning result
- No dust emission

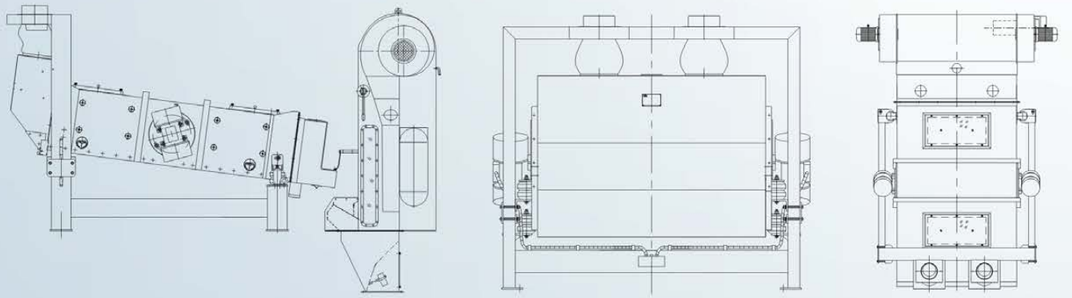

Items / Model	Sieve's area (mm)	Output(T/h)		Power(kW)	Motor Type	Weight (Kg)	Over dimension (L×W×H)(mm)
		Pretreat	Settie				
TQLZ60×100	600×1000	15	4.8	2×0.25	YZU-4-6A	350	1785×1080×1468
TQLZ100×100	1000×1000	25	8	2×0.25	YZU-4-6A	520	1685×1563×1673
TQLZ100×150	1000×1500	37.5	12	2×0.37	YZU-5-6A	620	2180×1563×1673
TQLZ100×200	1000×2000	45	15	2×0.37	YZU-5-6A	720	2675×1563×1823
TQLZ150×150	1500×1500	45	15	2×0.55	YZU-8-6A	935	2180×2115×1723
TQLZ150×200	1500×2000	60	20	2×0.55	YZU-9-6A	1040	2675×2115×1823
TQLZ180×200	1800×2000	70	22	2×0.75	YZU-10-6A	1140	2675×2466×1823
TQLZ200×200	2000×2000	75	25	2×0.75	YZU-12-6A	1250	2675×2643×1823
TQLZ125×200B×2	1250×2000×2	110	35	4×0.55	YZU-8-6A	1750	2430×1528×2185

TQLZa High Efficiency Vibration Sieve

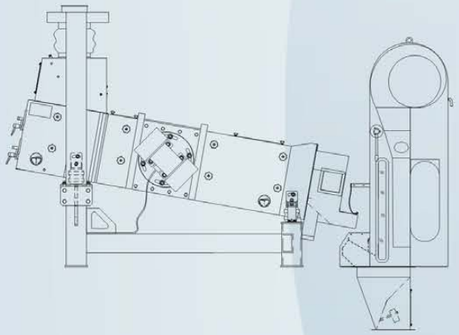

It is mainly used to clean and remove large, medium, small and light impurities.

- Low noise
- Large processing, low consumption of energy
- Good cleaning result
- No dust emission

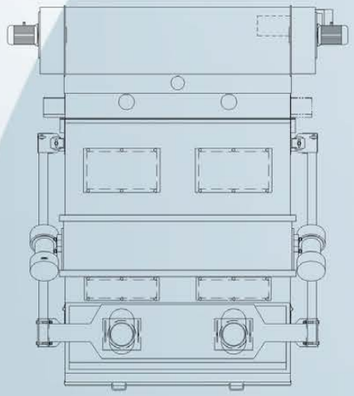

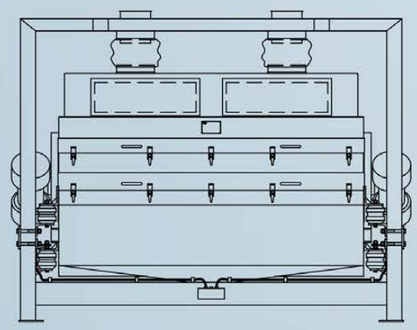

Model \ Items	Output(t/h)	Power(kW)	Suction volume (m^3/min)	Weight (kg)	Sieve's area (B×L)(mm)	Over dimension (L×W×H)(mm)
TQLZ150a×270	27/90	2×1.5	125	1720	1500×2700	3150×2254×2278(2338)
TQLX180a×270	35/110	2×1.5	135	1840	1800×2700	3150×2456×2210
TQLX150a×230	22.5/60	2×0.75	115	1300	1500×2300	2768×2138×2050
TQLX180a×230	30/80	2×1.5	135	1420	1800×2300	2768×2438×2050
TQLX200a×230	35/90	2×1.5	150	1660	2000×2300	2768×2700×2050

FDMW-E Horizontal Wheat SCOURER

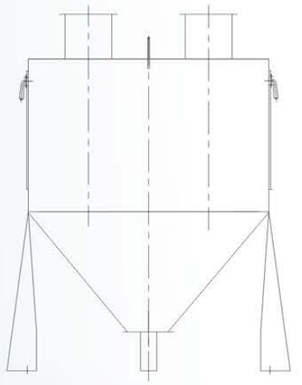

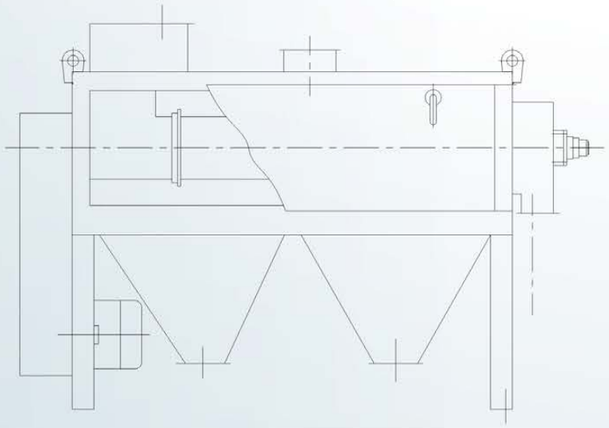

It is one of the ideal machines for flour mills to clean dry wheat. It can smash the clods in the wheat and remove the mud and deteriorated wheat.

- Reduce ash content
- Improve purity
- Clean mud, sand and awn.

Items \ Model	FDMW30×95E	FDMW30×95E×2	FDMW40×150E	FDMW40×150E×2
Output(t/h)	5~8	10~16	8~12	16~24
Power(kW)	5.5	2×5.5	7.5–11	2×7.5-2×11
Motor type	Y132S–4	Y132S–4	Y132S–4–Y160M–4	Y132M–4-Y160M-4
Allocated air amount(m^3/h)	⩾480	one side⩾480	⩾600	one side⩾600
Mud removal rate (%)	⩾70	⩾70	⩾70	⩾70
Ash reduction rate (%)	⩾0.05	⩾0.05	⩾0.05	⩾0.05
Fragmentary wheat increase rate (%)	⩽0.5	⩽0.5	⩽0.5	⩽0.5
Weight(Kg)	528	1010	810~840	1450~1510
Overall dimension(L×W×H)(mm)	1810×878×1508	1810×1383×1508	2613×920×1770	2613×1390×1770